Midterm Report

The pHIF Pill: An Esophageal Sensor

Submitted by:

Ethan Hawes, Ethan Lao, Prayush Shahir, Derek Sisbarro

BMD_ENG 390-1 Team 6

Sponsored by:

Northwestern Biomedical Engineering

Professors Matthew Glucksberg and David O'Neill

McCormick School of Engineering and Applied Science

Northwestern University

Evanston, Illinois 60208

1. Executive Summary

Patients with Barrett's esophagus often experience asymptomatic acid reflux, which masks esophageal tissue metaplasia and dysplasia from patients and physicians unless expensive and invasive measurement devices are used. We aim to create a tethered sensor capsule that utilizes pH, impedance, and force sensors to capture a picture of a patient's esophageal acid exposure and disease state while remaining non-invasive and tolerable for the patient.

We have identified key sensor parameters of interest:

1) pH – gives a picture of acid exposure near the lower esophagus and sphincter
2) Impedance – characterizes the leakiness of the esophageal wall due to Barrett's-associated degradation
3) Force sensing – locates approximately where the capsule is in the esophagus.

Within pH sensing technologies, electrochemical methods of measurements, namely through IGFET and EGFET technologies stand out for being accurate, cheap to manufacture, and easily miniaturizable for use within a small capsule. Mucosal impedance utilizing circumferential sensing rings allows for non-invasive application of current to the esophageal walls and quick analysis of the results to gain information on tissue health. Force sensing utilizing a compressible rubber ring, incompressible fluid, and piezoresistive pressure sensors allows for the sensing of compression on the device from any and all directions.

The device will be a capsule that is 13mm in diameter, 30mm in length, and connected to a tethered cord that sends the pH, impedance, and force/pressure signals to an external monitor. The capsule will be administered orally, and the capsule will be allowed to pass the lower esophageal sphincter before removal. The administrator will then slowly

remove the device by pulling on the tether, the device will be taking continuous measurements during the removal process.

2. Table of Contents

1. Executive Summary....2
2. Table of Contents....4
3. Objectives....6
3.1 Problem Statement....6
3.2 Clinical and Design Goals....6
3.3 Stakeholders....7
3.4 Assumptions and Constraints....8
4. Background....9
4.1 Gastroesophageal Reflux Disease (GERD)....9
4.2 Barrett's Esophagus and Progression to Esophageal Adenocarcinoma....10
4.3 Current Treatments for Barrett's Esophagus....10
4.4 Project Motivations....11
5. Users & Use Environment....13
5.1 Users....13
5.2 Use Environment....14
6. Technology Assessment....15
6.1 The Medtronic Bravo....15
6.2 Electrochemical pH Sensing Devices....16
6.3 Impedance Sensing Devices....19
6.4 Pressure Sensing Devices....22
7. Requirements....26
8. Approach....29
9. Design Objectives and Target Specifications....31
9.1 Design Objectives....31
9.2 Target Specifications....32
10. Sensor Technology and Alternatives....35
10.1 pH Sensor Approaches....35
10.1.1 Glass Electrodes....35
10.1.2 Transistor-Based Electrodes....35
10.1.3 Metal Oxide Electrodes....36
10.2 Impedance Circuit Design....36
10.3 Force Sensor Approaches....38
10.3.1 High-Resolution Manometry....38
10.3.2 Fluid-Coupled Pressure Sensors....39
10.3.3 Force Sensitive Resistors....39
11. Selection Rationale....40

11.1 pH Sensor..... 40
Decision Matrix (Ranking)..... 41
11.2 Impedance Circuit Components..... 44
Microcontroller Decision Matrix..... 45
Impedance Converter Decision Matrix..... 45
Electrode Decision Matrix..... 46
11.3 Force Sensor Selection Rationale..... 47
Force Sensor Decision Matrix..... 48
12. Appendix.....49
12.1 Optical Sensing Devices..... 49

3. Objectives

This section defines what we intend to build and why. It states the problem, sets out the clinical and design goals, lists the stakeholders, and closes with the assumptions and constraints that bound the project.

3.1 Problem Statement

Patients with Barrett's esophagus often cannot feel acid reflux, so their acid-suppressing therapy is adjusted according to symptoms they do not have, while the tools that measure acid directly are too uncomfortable and costly for routine use. We intend to design a swallowable, tethered sensor capsule that measures esophageal acid exposure in a few minutes during a routine clinic visit, without sedation or nasal intubation, so that physicians can manage therapy based on measurement rather than symptoms.

The evidence is laid out in Section 4. In brief, under the current guideline any increase in proton pump inhibitor (PPI) dose is based on symptoms and measurement of acid exposure is not recommended,[1] and the two existing ways to measure acid, a nasal catheter worn for 24 hours and a wireless capsule worn for two to four days, are uncomfortable for patients and/or expensive.

3.2 Clinical and Design Goals

The first clinical goal is to identify uncontrolled acid exposure in Barrett's patients who report no symptoms, so that the PPI dose can be raised or other treatment considered before damage continues. The second goal is to make this check easy enough to repeat at ordinary gastroenterology visits, including the surveillance visits every 3 to 5 years that Barrett's patients

[1] Shaheen et al., "Diagnosis and Management of Barrett's Esophagus."

already attend, so that changes in acid control are caught between endoscopies. The third goal is to reduce the use of sedated endoscopy and multi-day ambulatory monitoring for this purpose, reserving those tests for patients whose capsule result calls for them, which lowers patient burden and cost. A secondary goal is to indicate how far the Barrett's lining extends up the esophagus, which would add to what surveillance endoscopy provides. The expected long-term benefit is less progression to dysplasia and cancer, since PPI use is associated with a 71% lower risk of high-grade dysplasia or cancer,[2] although that outcome cannot be verified within this project.

The design goal is a small, disposable capsule attached to a thin tether that a patient swallows without sedation in an exam room. The capsule carries a pH sensor, an impedance sensor, and a pressure sensor. The physician withdraws it at a steady rate through the esophagus over roughly three to five minutes while the three signals are recorded. From these recordings, the lower esophageal sphincter is located from the pressure trace, the pH step-up from the pH trace, and the presence and upward extent of refluxate, including non-acid reflux, from the impedance trace, with the condition of the lining itself as a secondary impedance measure. The output reports where acid begins relative to the sphincter, how far reflux travels up the esophagus, and whether the lining shows signs of chronic exposure, and it is available before the patient leaves. Two features set this apart from existing devices. The measurement is referenced to the sphincter position found by pressure, which the pH signal alone cannot provide reliably,[3] and the whole test takes minutes rather than days.

3.3 Stakeholders

Stakeholders are listed below, starting with those the device affects most directly:

[2] Singh et al., "Acid-Suppressive Medications and Risk of Oesophageal Adenocarcinoma in Patients with Barrett's Oesophagus."
[3] Mattox et al., "Gastroesophageal pH Step-up Inaccurately Locates Proximal Border of Lower Esophageal Sphincter."

1) Patients with Barrett's esophagus are the primary beneficiaries. They must be willing to swallow a tethered capsule while awake and accept the test at repeated visits.
2) Gastroenterologists, represented by our client Dr. Sri Komanduri of Northwestern Medicine, will administer or supervise the test. The output has to be clear and quick to read.
3) Clinic nurses and technicians will prepare the patient, handle the capsule and tether, and manage the data.
4) Esophageal physiology researchers, specifically Dr. John Pandolfino's laboratory at Northwestern, are advising on sensor integration, and their published work underlies the measurement concept
5) Hospitals and payers will weigh the cost of the test against endoscopy and ambulatory monitoring, and any clinical use would require FDA review.
6) The BME 390 faculty and our team are the final stakeholders, and for them the deliverable is a design concept and proof-of-concept mock-up that meets the requirements of the groups above.

3.4 Assumptions and Constraints

Our client's requirements, which we treat as fixed constraints, are no sedation, no transnasal placement, delivery through the mouth, a measurement time of about three to five minutes, and a test an asymptomatic patient would agree to repeat. These exclude endoscopic placement, nasal catheters, and multi-day recording.

Further constraints come from the course. The project runs for a single quarter, with the midterm report due November 13 and final presentations in the first week of December. The deliverable set by the syllabus is a design concept and proof-of-concept mock-up rather than a

working prototype, so the quarter will end with a bench demonstration of the sensing and tether concept, not a device ready for patients. The team is four biomedical engineering undergraduates with coursework in electronics, signal processing, and fabrication but no formal clinical or regulatory experience. Testing in people is not possible, so validation will use bench models such as buffered pH solutions and a simulated esophagus, within the budget provided by the course.

4. Background

This section gives the medical background for the project. It covers what GERD is and how it develops, what Barrett's esophagus is and how it progresses to cancer, why Barrett's patients often cannot feel reflux, how the condition is treated today, and the gap in care that our device is designed to address

4.1 Gastroesophageal Reflux Disease (GERD)

GERD is a chronic condition in which stomach contents flow back into the esophagus often enough to cause symptoms or damage.[4] In North America, between 18.1% and 27.8% of people have GERD.[5] The junction between the esophagus and the stomach functions as a one-way valve, formed by the lower esophageal sphincter and the diaphragm around it. GERD develops when reflux through this valve exceeds what the esophagus can clear, usually because the sphincter relaxes without a swallow, a hiatal hernia has displaced it, or the esophagus clears acid slowly.[6] GERD is normally diagnosed from symptoms alone, and a patient who improves on acid-suppressing medication receives no further testing.

[4] Shaqran et al., "Epidemiology, Causes, and Management of Gastro-Esophageal Reflux Disease."
[5] El-Serag et al., "Update on the Epidemiology of Gastro-Oesophageal Reflux Disease."
[6] Tack and Pandolfino, "Pathophysiology of Gastroesophageal Reflux Disease."

4.2 Barrett's Esophagus and Progression to Esophageal Adenocarcinoma

Barrett's esophagus (BE) develops after years of acid injury, when the normal flat cells lining the lower esophagus are replaced by column-shaped cells like those in the intestine, a change called intestinal metaplasia. Diagnosis requires this change on biopsy, and an estimated 5% to 12% of people with long-standing GERD symptoms have it.[7] BE is important because it is the only known precursor of esophageal adenocarcinoma (EAC), progressing in steps from metaplasia to dysplasia to cancer. In a Danish study of 11,028 BE patients, the cancer risk was 0.12% per year overall, and patients with low-grade dysplasia had about five times the risk of those without it.[8] Between 1975 and 2001, EAC incidence in the United States rose about sixfold,[9] and because most cases are caught late, five-year survival is still under 20%,[10] Research supports our client's observation that BE patients often do not feel reflux. When acid was dripped into the esophagus, only 66% of BE patients felt pain, compared with 100% of patients with ordinary reflux esophagitis.[11] Symptoms are therefore unreliable. Population studies suggest that 40% to 50% of people diagnosed with EAC never reported chronic reflux, and screening based on reflux symptoms identifies only 39% to 43% of cases.[12]

4.3 Current Treatments for Barrett's Esophagus

Under the American College of Gastroenterology guideline, patients with chronic reflux and three or more other risk factors get one screening endoscopy. If BE is found, they return for surveillance endoscopy every 3 to 5 years. If high-grade dysplasia is found, the abnormal tissue

[7] Shaheen et al., "Diagnosis and Management of Barrett's Esophagus."
[8] Hvid-Jensen and Sørensen, "Incidence of Adenocarcinoma among Patients with Barrett's Esophagus."
[9] Pohl and Welch, "The Role of Overdiagnosis and Reclassification in the Marked Increase of Esophageal Adenocarcinoma Incidence."
[10] Thrift, "Global Burden and Epidemiology of Barrett Oesophagus and Oesophageal Cancer."
[11] Johnson et al., "Esophageal Acid Sensitivity in Barrett's Esophagus."
[12] Shaheen et al., "Diagnosis and Management of Barrett's Esophagus."

is removed or ablated endoscopically. Between visits, BE patients stay on a daily proton pump inhibitor (PPI), since PPI use has been linked to a 71% lower risk of high-grade dysplasia or cancer.[13] However, under the guideline the PPI dose is increased only in response to symptoms, symptom control is acknowledged not to guarantee acid control, and measurement of acid exposure is never recommended.[14]

4.4 Project Motivations

Acid exposure promotes the progression of BE toward cancer and acid suppression lowers the risk, yet acid management is based on symptoms these patients often lack. Direct measurement of acid is the obvious solution, but it is rarely done because the tools are a burden. Patients rated catheter-based 24-hour monitoring a median of 5.1 out of 10 for discomfort, and the better tolerated wireless capsule still needs a placement procedure and a 48-hour recording and costs more.[15]

Two findings suggest that a brief measurement could be sufficient. First, the location of the acid is informative. After a meal, a pocket of unbuffered acid forms at the top of the stomach, and when a pH sensor is pulled up into the esophagus the pH jumps sharply at its edge, the pH step-up. In a Northwestern study, this point was tracked with pH and manometry catheters under fluoroscopy in 10 healthy controls and 10 GERD patients. In the controls, it remained at or just below the junction in every condition. In the GERD patients it was a median of 0.8 cm above the junction after a meal when upright and 2.0 cm above when lying down, the acidified segment was about three times longer (3.0 to 3.5 cm versus 1.0 cm), and when lying down the acid

[13] Singh et al., "Acid-Suppressive Medications and Risk of Oesophageal Adenocarcinoma in Patients with Barrett's Oesophagus."
[14] Shaheen et al., "Diagnosis and Management of Barrett's Esophagus."
[15] Andrews et al., "Unsedated Peroral Wireless pH Capsule Placement vs. Standard pH Testing"; Wenner et al., "Wireless Esophageal pH Monitoring Is Better Tolerated than the Catheter-Based Technique."

extended into and past the lower esophageal sphincter even though the sphincter was closed.[16] A standard pH probe, positioned 5 cm above the sphincter, does not detect this acid. The step-up alone is not a reliable landmark, since in 58% of patients it fell more than 3 cm from the true sphincter position, so the sphincter must be located with a pressure measurement.[17] Notably, 4 of 10 patients in each group declined or could not tolerate both catheters at once, exactly the burden a single capsule with both sensors avoids.

Second, the esophageal lining retains measurable effects of acid exposure. Mucosal impedance, measured at a single time point, is lower in GERD patients, returns to normal with acid suppression, and identified esophagitis with 95% specificity versus 64% for wireless pH monitoring.[18]

Our device will combine these ideas in a tethered capsule equipped with a pH probe, an impedance sensor, and a pressure sensor. The patient swallows the capsule, and the physician then withdraws it through the esophagus on a thin tether, an approach shown to be simple and painless in human subjects. As the capsule is withdrawn, the sphincters are located from the pressure signal, the step-up from the pH signal, and the condition of the lining from the impedance signal, so we can determine where acid begins relative to the sphincters and whether the tissue shows signs of chronic exposure.

[16] Pandolfino et al., “Acidity Surrounding the Squamocolumnar Junction in GERD Patients.”
[17] Mattox et al., “Gastroesophageal pH Step-up Inaccurately Locates Proximal Border of Lower Esophageal Sphincter.”
[18] Ates et al., “Mucosal Impedance Discriminates GERD From Non-GERD Conditions.”

5. Users & Use Environment

This section overviews the context and setting of the capsule's use. Detailed below are the individuals interacting with the device as well as the different settings the capsule will be used in.

5.1 Users

The primary users of the device will be asymptomatic individuals with Barrett's esophagus, although it could also be used in patients experiencing symptoms to assess esophageal tissue health. Around 30-40% patients experience asymptomatic reflux despite PPI therapies, and these individuals will comprise the core of those needing this test to avoid progression to carcinoma.[19] Patient comfort needs to be prioritized as they must swallow the tether and capsule for 3-5 minutes and regurgitate it for removal. They will be aided with a glass of water or food to aid in digestion, and need to consent to this procedure being performed without sedation.

Gastroenterologists are the primary operators of the device. Doctors will be the primary users to perform the quick procedure on patients and analyze the data with the help of clinical technicians. They will make the ultimate decision of whether effective reflux is occurring and the next care steps for the patient. Finally, nurses and other clinical technicians make up the tertiary user group of the tethered capsule. They will be those most involved with preparing and calibrating the device before use, and ensuring the patient is set up and briefed on the procedure. It is also possible that some nurses could perform the insertion and removal on the patient depending on experience. They will also be involved in reading and documentation of the results

[19] Saha et al., "Barrett's Esophagus Risk Factors In Patients without Gastroesophageal Reflux."

and measurements as well as proper disposal of the device. This group is responsible for the logistics of use to ensure proper discussion occurs between the patient and gastroenterologist.

5.2 Use Environment

The device is intended to be used in a clinical setting. Because it is designed to be non-invasive and administered without sedation or anesthesia, the device will be used in an outpatient examination room as opposed to an operating or endoscopy room. An outpatient setting is also appropriate due to the lack of specialized equipment needed besides the tethered capsule and the components to read the pH and impedance values. Therefore, the capsule and output machinery must be organized into a portable configuration that can be efficiently brought in and out of outpatient examination rooms.

In the physiological setting, the capsule will be exposed to a harsh environment in the esophagus and stomach. The capsule will encounter a variety of body fluids besides acidic refluxate, including non-acidic refluxate, saliva, and mucus. The device also needs to tolerate the acidic environment in the stomach, where pH can become as acidic as 1 pH.[20] Furthermore, when crossing the lower esophageal sphincter, the capsule will be acted on by pressure up to 30-45 mmHg above gastric baseline.[21] Therefore, the device must serve to function in a physiologically unforgiving environment.

[20] Roman et al., "Correlation between Gastric pH and Gastro-Oesophageal Reflux Contents."
[21] Rosen and Winters, "Physiology, Lower Esophageal Sphincter."

6. Technology Assessment

Current technologies aimed to monitor asymptomatic BE patients fail to provide adequate screening while prioritizing patient comfort. Specifically, the Medtronic Bravo, which is the current standard of care, needs to be placed under sedated endoscopy or placed through the nose, which patients have trouble tolerating. This section will explain why the current gold standard is not adequate for our users and use environment, and then dive into alternative classes of devices and technologies that could be utilized.

6.1 The Medtronic Bravo

The Medtronic Bravo was first approved by the FDA for clinical use in 2005 for continuous esophageal pH monitoring for a period of 2-4 days[22]. The device consists of the implanted pH sensing module, which consists of an antimony pH electrode and a reference electrode along with a pager-sized receiver that records pH data that is sent through radio frequency signal[23]. To aid deployment of the device (either transnasally or orally), the delivery catheter (Figure 1) has markings that help physicians place the device at predetermined depths[24]. The Medtronic Bravo is not without its drawbacks, however. Although patient throat comfort was better than past catheter-based pH monitoring systems, the Bravo had higher reported esophageal discomfort (~33% of participants), and a small subset of patients developed severe odynophagia and chest pain which warranted endoscopic removal of the capsule[25]. Because the Bravo is a pH monitor, it cannot distinguish between acidic beverages and true acid reflux, unlike other technologies, such as multichannel

[22] Lawenko and Lee, "Evaluation of Gastroesophageal Reflux Disease Using the Bravo Capsule pH System," 2016.
[23] Kwiatek and Pandolfino, "The Bravo™ pH Capsule System."
[24] Kwiatek and Pandolfino, "The Bravo™ pH Capsule System."
[25] Kwiatek and Pandolfino, "The Bravo™ pH Capsule System."

intraluminal impedance and pH, which detects both fluid movement along the esophagus and pH.

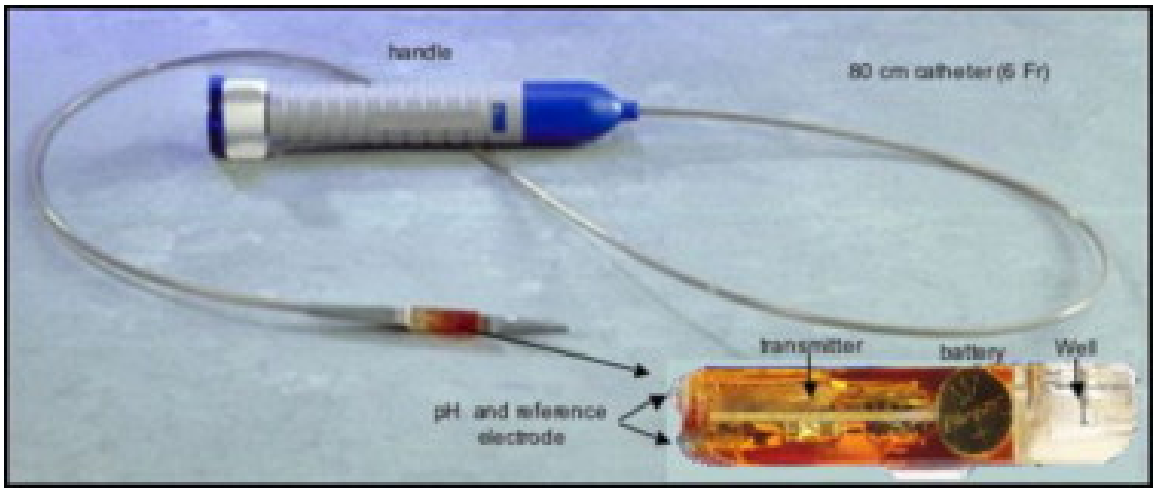

Figure 1: Medtronic Bravo delivery catheter and capsule. The delivery catheter is 80 cm in length with a diameter of 6 French. The capsule has dimensions of 6 mm × 5.5 mm × 25 mm.[26]

6.2 Electrochemical pH Sensing Devices

The pH of a solution is determined by the negative log of the concentration of hydrogen ions. In our use case, detecting the presence of gastric juice (pH 1.35-3.5) and saliva (5.8-7.1 pH) is of interest[27]. pH sensors offer the ability to provide risk-free and continuous pH monitoring in various biological fluids through optical, electrochemical, and wearable technologies.

Electrochemical pH sensing stands out in this array due to their ability to be miniaturized and wide range of detectable pH, as demonstrated through an ion-sensitive field effect transistor (ISFET) device (with a linear range pH 1-11)[28]. Electrochemical sensors,

[26] Kwiatek and Pandolfino, "The Bravo™ pH Capsule System."
[27] Hassan Akhtar et al., "Advances in pH Sensing."
[28] Hassan Akhtar et al., "Advances in pH Sensing."

namely transistor-based sensors, like the ISFET and the extended gate field effect transistor (EGFET) are technologies that lend themselves ideal to measuring pH in the esophagus. They are able to be miniaturized, have high sensitivity, and can sense pH in a wide range.

ISFETs are similar in principle to their metal oxide semiconductor field effect transistor (MOSFET) counterparts (Figure 2). They differ in structure, where ISFETs replace the metal gate with an ion sensitive oxide layer, but provide the same endpoint of pH measurement through measuring change in potential difference to a reference electrode.

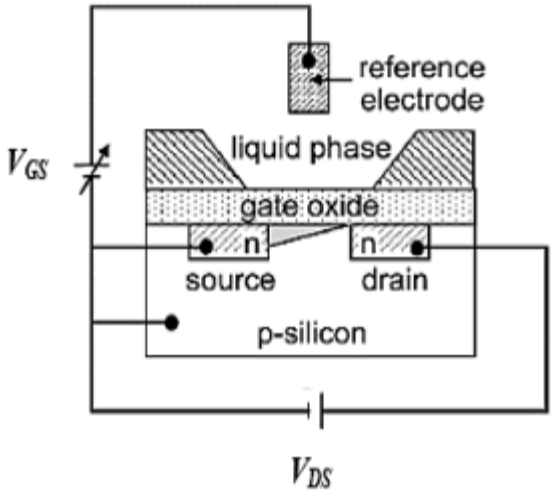

Figure 2: The structure of the ISFET[29].

Another big advantage of ISFETS is their ability to be prepared with a large number of sensors on a wafer, which makes manufacturing cheap while maintaining their advantage as a sensitive pH sensor. In pH-sensing applications, an ISFET operates alongside an Ag/AgCl reference electrode, which relies on a reversible redox reaction in the presence of the solution's Cl^- ions to maintain a known, constant reference potential[30,31]. However, one

[29] Hassan and Abdolkader, "A Review of Ion-Sensitive Field Effect Transistor (ISFET) Based Biosensors."
[30] Kim et al., "Silicon Nanowire Ion Sensitive Field Effect Transistor with Integrated Ag/AgCl Electrode," 2011.
[31] Manjakkal et al., "Metal Oxides Based Electrochemical pH Sensors."

drawback of ISFETs are that they can have issues with low current sensitivity and device instability that can lead to hysteresis[32].

EGFETs differ from ISFETs in that they feature an isolated FET and a standard metal oxide based gate, and the sensing membranes are physically separated, unlike ISFETs (Figure 3). The sensitive working electrode layer of an EGFET can be made of metal oxides, carbon, or polymers, with metal oxides such as tantalum oxide, indium–tin oxide, and tin oxide just to name a few[33]. The advantages of EGFETs are that the sensing electrode can be made to be disposable, where ISFETs must be replaced entirely.

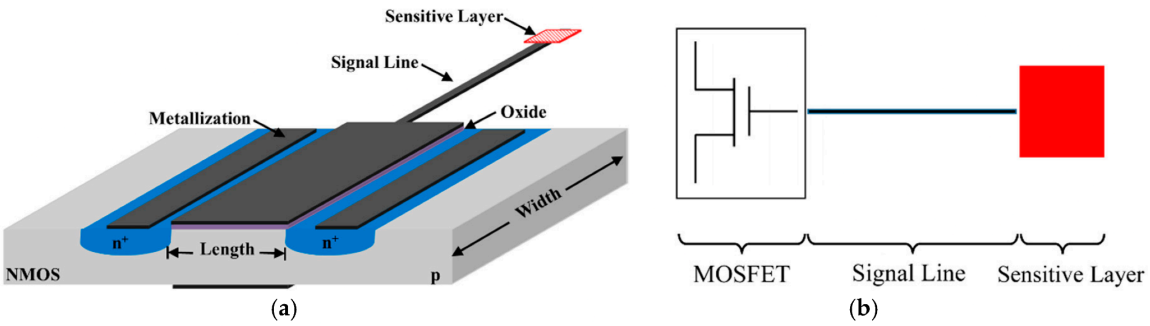

Figure 3: (a) section of a device based on EGFET technology. (b) schematic of a separative-extended gate-field-effect transistor[34].

Compared to the Medtronic Bravo which uses an antimony electrode with a reference electrode, using either ISFETs or EGFETs can make way for accurate measurements of acid exposure[35].

[32] Hassan Akhtar et al., "Advances in pH Sensing."
[33] Pullano et al., "EGFET-Based Sensors for Bioanalytical Applications."
[34] Pullano et al., "EGFET-Based Sensors for Bioanalytical Applications."
[35] Hemmink et al., "Ambulatory Oesophageal pH Monitoring."

6.3 Impedance Sensing Devices

Multi-channel intraluminal impedance (MII) is measured via several electrodes spaced along a catheter which is placed in the lumen of the esophagus[36]. It detects the impedance of a low current between electrodes, and is able to detect any electrically conductive fluid (such as gastric fluid). In the clinic, MII is often paired with pH or manometry to determine the characteristics of the substance by pairing information about the type of substance (liquid vs. gas) and the pH of the substance (acidic/basic) or esophageal contractions to determine if the event is due to acid reflux. These events are usually measured via a catheter inserted into the esophagus orally, seen in Figure 4.

[36] Marshall-Webb et al., "Mucosal Impedance as a Diagnostic Tool for Gastroesophageal Reflux Disease," 2024.

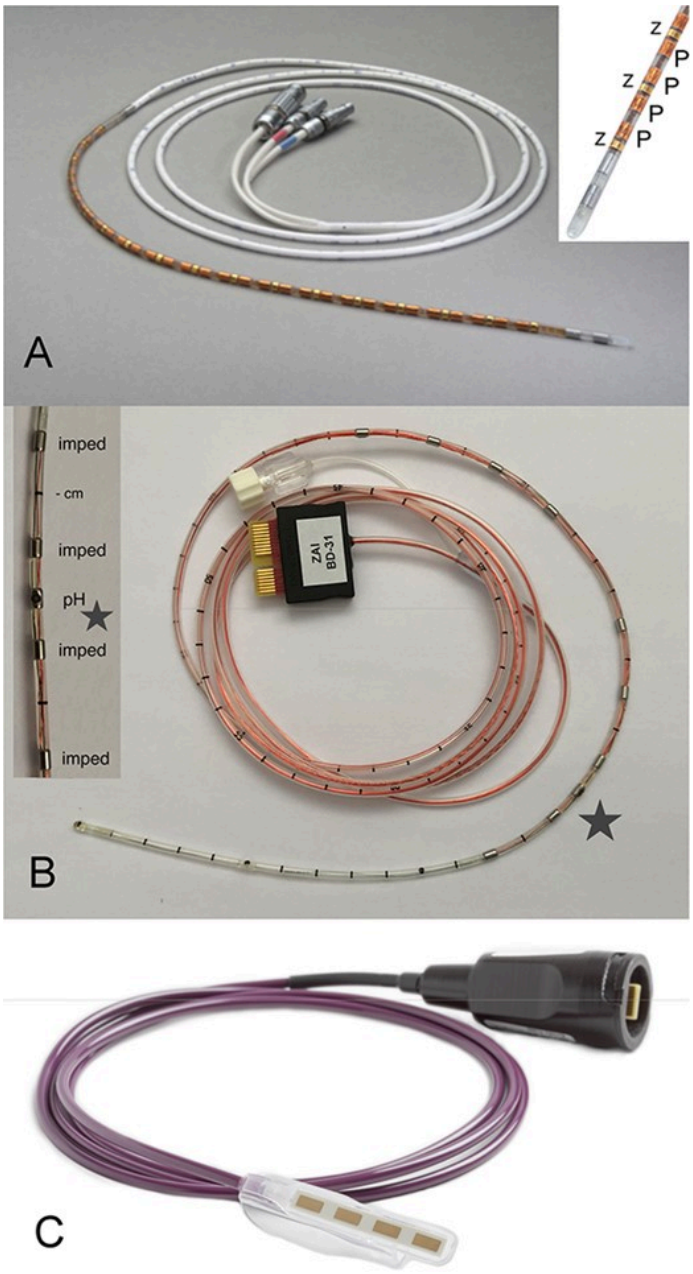

Figure 4: A) high-resolution impedance-manometry catheter (4.2 mm ⌀, 36 pressure; 18 impedance, Medtronic EAZ). B) Dual pH-impedance reflux catheter (2.3 mm ⌀, 2 pH (15 cm apart); 6 impedance, Diversatek). (C) MiVu Endo Cap attaches to an endoscope

for direct vision and targeted acquisition of real-time mucosal impedance, for display of mucosal integrity contour pattern. (Courtesy Diversatek Healthcare Inc. USA.)[37].

Mucosal impedance is a measurement of the esophageal mucosa. It can be useful in diagnosing BE since BE patients have a lower baseline mucosal impedance compared to healthy patients. Clinically, mucosal impedance is most valuable as a follow-up for diagnosing GERD when pH/MII testing is inconclusive. However, MI can provide important information about esophageal wall integrity and the effects of reflux on tissue. This is especially useful as it can quickly provide information about esophageal health in a short period of time without a reflux event necessary, unlike MII[38]. It consists of two electrode columns placed either on a steel catheter or inflatable PET balloon, which allow the electrodes to directly contact the esophageal wall. A voltage transducer is connected to the electrodes via a thin copper wire, which transports AC current into the tissue and from the capsule back to an impedance acquisition system to interpret the results.[39] Elucidating the impedance relies on the equation $Z = \frac{V}{I}$, where Z is the impedance in Ohms, V is the measured AC voltage, and I is the applied AC current. Normal epithelial impedance in the esophagus can range from 2,000-4,000 Ohms, and can drop to 1,000 Ohms in diseased tissue. More specifics on the specifications and design of the impedance sensor in the device can be found in the requirements and approach sections.

[37] Marshall-Webb et al., "Mucosal Impedance as a Diagnostic Tool for Gastroesophageal Reflux Disease," 2024.
[38] Marshall-Webb et al., "Mucosal Impedance as a Diagnostic Tool for Gastroesophageal Reflux Disease," 2024.
[39] Yuksel et al., "Use of Direct, Endoscopic-Guided Measurements of Mucosal Impedance in Diagnosis of Gastroesophageal Reflux Disease."

6.4 Pressure Sensing Devices

In order to determine location of the sensor in the esophagus at any given time, it is necessary to be able to determine where the lower esophagus ends and the stomach begins. Detecting when the device passes through the sphincter, which is held at a resting pressure level of 15 to 30 mmHg, during administration and/or removal of the device would allow us to determine when the device enters or leaves the stomach. One method of detecting this event is through the continuous measurement of pressure on the exterior walls of the device. There are multiple promising devices that are currently being or can be used to measure pressure in vivo including PressureCap[40], pressure sensor capsules used to measure pressure from small intestine contractions[41], and Tekscan Flexiforce A101[42].

PressureCap is a tethered capsule that is wrapped in four pressure sensors made of a flexible, compressible silicone (PDMS) structure. A fifth sensor is located at the front of the capsule to measure intraluminal pressure. Each sensor is composed of conductive layers of thin-film aluminum separated by the compressible silicone layers. When a sensor is subjected to force, this silicone layer is compressed, the distance between the conductive layers is decreased, and the capacitance and resonant frequency is altered. This signal is sent through the tether where the frequency shift can be monitored and a pressure event can be sensed. This sensor is capable of measuring pressure events from 0-25 kPa. The device is 12 mm in diameter and 30 mm in length.

---

[40] Mitrakos et al., "PressureCap: An Endoscopic Sensor Capsule for Real-Time Gastrointestinal Pressure Monitoring."
[41] Li et al., "Design and Preliminary Experimental Investigation of a Capsule for Measuring the Small Intestine Contraction Pressure."
[42] Ferguson-Pell et al., "Evaluation of a Sensor for Low Interface Pressure Applications."

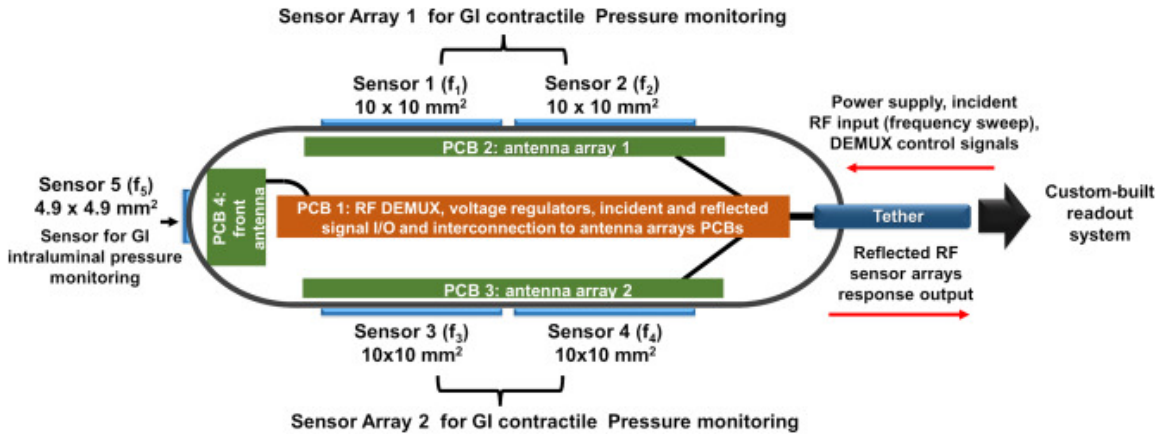

Figure 5: Diagrammatic overview illustrating the spatial arrangement of integrated sensors, printed circuit board functionality, and data signal transmission via the tethering system to the primary external data acquisition interface[43].

Li et al. developed a tethered capsule designed to measure pressure from contractions in the small intestine. Like the PressureCap, it is a tethered capsule with sensors surrounding it. It is composed of a rubber membrane, an O-ring, silicone oil, and two pressure sensors. One pressure sensor is placed at the front of the capsule so that it measures solely ambient pressure, while the second sensor is placed on the side of the capsule so that it measures ambient and contraction pressure. Contraction pressure is determined by subtracting the ambient pressure reading from the ambient and contraction pressure reading. This device is 12 mm in diameter and 30 mm in length.

[43] Mitrakos et al., "PressureCap: An Endoscopic Sensor Capsule for Real-Time Gastrointestinal Pressure Monitoring."

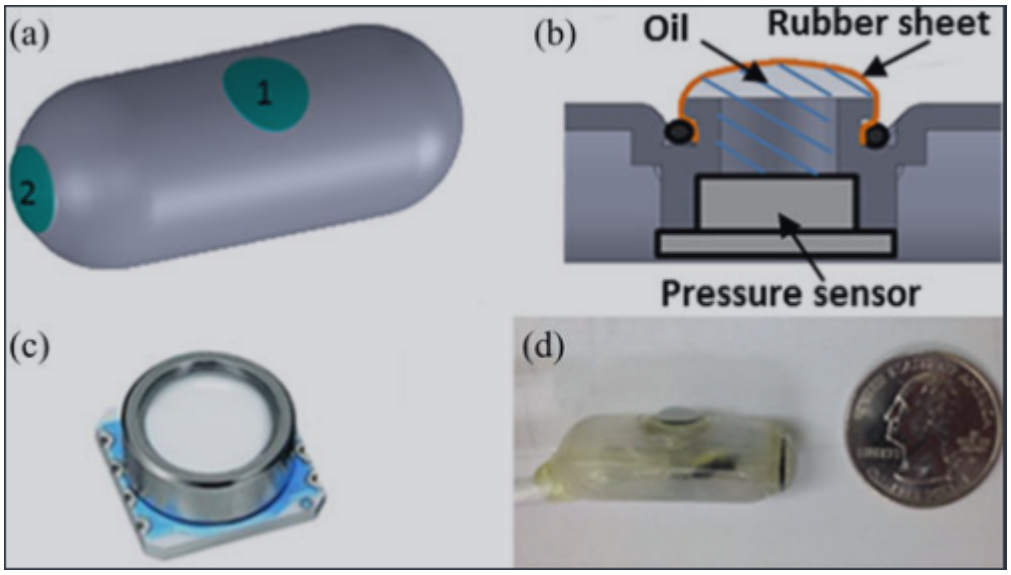

Figure 6: (a) CAD model of capsule (the capsule has two pressure measurement units, 1 and 2). (b) Measurement unit structure. (c) Pressure sensor module. (d) Capsule prototype[44].

Tekscan Flexiforce A101 is a thin, flexible piezoresistive force sensor that has a force reading range of 0-18 N. It is composed of a layer of force-sensitive ink surrounded by silver conductors placed between polyester substrate layers. When force is applied, the ink is compressed, which causes a decrease in resistance in the ink. This increases conductance, which can be sensed through wiring connected to an external monitor. Unlike the other pressure sensors described above, this has not been proven to be able to be used in the esophagus, but it is an option to be incorporated into our design because of its flexibility, size, and pressure range. This device is 15.7 mm in width, 7.6 mm in length, and 0.203 mm in thickness.

[44] Li et al., "Design and Preliminary Experimental Investigation of a Capsule for Measuring the Small Intestine Contraction Pressure."



Figure 7: Tekscan Flexiforce A101.

7. Requirements

Requirement ID	Description	Rationale	Importance (1-5)
Overall			
1.0	Device must be able to be placed without sedation.	This device is designed to be placed and removed in out-patient rooms, and is meant to screen patients to indicate whether more invasive test methods are required.	5
1.1	Device must be able to be removed without sedation.		5
2.0	Device must be able to detect pH.	In order to detect GERD events that involve acidic reflux and (possibly) residual acid from reflux events, a pH sensor is required.	5
3.0	Device must have a method of determining its position in relation to the LES.	In order to determine height of reflux events and how widespread BE is, the device must have a method of determining distance/height up the esophagus from the LES.	4
4.0	Device must be able to differentiate between normal Esophageal tissue and intestinal lining tissue.	BE is the result of metaplasia of esophageal cells from normal esophageal lining to intestinal lining.	5
5.0	Device must be able to detect impedance.	Impedance sensing is necessary to gain data on the esophageal wall health and any residual pH.	5
Administration/Removal			
1.2	Sensors, wiring, etc. that will be placed in the patient must be in a capsule that can easily be swallowed.	In order for the device to be administered noninvasively (i.e. without sedation, incisions, etc.), the device must be able to be swallowed or delivered transnasally, which requires encapsulation of the sensors.	5
1.3	Capsule must be tethered.	In order to place the device in the correct part of the esophagus and remove it without sedation and noninvasively, the device must be tethered.	5
1.4	Capsule must have a diameter of <=13 mm	This maximum diameter is supported by literature documenting orally delivered minimally invasive capsules measuring pressure	5

		and pH .	
1.5	Device must be able to reach and bypass the Lower Esophageal Sphincter (LES).	To effectively detect GERD events and esophageal lining metaplasia, the device must be able to reach the very bottom of the lower esophagus, and penetrate past the LES for pH and positional calibration.	5
pH Detection			
2.1	Capsule containing the sensors, wiring, etc. must not dissolve in low pH environments.	This capsule will be placed in the lower esophagus and past the LES, which means it will be subjected to a pH environment as low as 1.0 pH. It must be able to withstand this environment without losing functionality or dissolving in such a way to be harmful to the patient.	5
2.2	pH sensor must have a detection range of 1-8 pH	Stomach acid can reach pH of lower than 1, and pH in the esophagus can reach or exceed 8. Since we are just attempting to detect reflux events or residual pH, we do not need to encapsulate EVERY possible pH value, but this range encapsulates the vast majority of pH levels in individuals.	3
2.3	pH detection must continuously send pH values throughout the test OR store pH data from the entire test to be exported later.	In order to effectively detect reflux events and where the pH stepdown from stomach acid to lower pH is in the patient, pH values at different locations in the esophagus must be able to be differentiated from each other.	4
Positional Detection			
3.1	The device must be able to detect when it passes the lower esophageal sphincter.	In order to determine the height of the capsule at any point, there must be a calibration point where y = 0 (where the LES is located).	4
3.2	The device must be able to be removed at a constant rate.	In order to determine the height of the capsule at any point, the rate of removal must be constant, then position at any time can be taken as distance = time * velocity of removal.	4

Differentiation Between Tissues			
4.3	The device must have a method of differentiating between cell types in vivo at different heights in the esophagus OR be able to take samples of tissues at different locations	Metaplasia of the esophageal lining cells can occur to varying heights in the esophagus, so sampling the esophagus at varying heights is imperative.	5
Impedance Sensing			
5.1	Sensor must be able to sense a range of 0-5 kOhms.	Healthy esophageal epithelial tissue can demonstrate impedance up to 4 kOhms, while diseased tissue can drop to 1 kOhm.	5
5.2	Voltage transducer must input at an excitation frequency of 5 kHz	Tissue blocks DC but allows AC, so the excitation frequency should be ~2 kHz for optimal measurement.	4
5.3	Wires should be able to safely carry 10 uA.	It is essential that the copper wires carry enough current to properly pass through the tissue, but also insulate the body against the current in a small diameter.	5
5.4	Electrode rings must fit on the capsule and inside the sphincter.	The device needs to be comfortable for the patient, so the electrode rings cannot drag along the esophagus or catch on anatomical appendages.	5
5.5	Impedance values must be easy to read in an appointment.	Because it is only a ~5 minute procedure, the data system must accurately and quickly display the impedance values collected by the capsule.	5

8. Approach

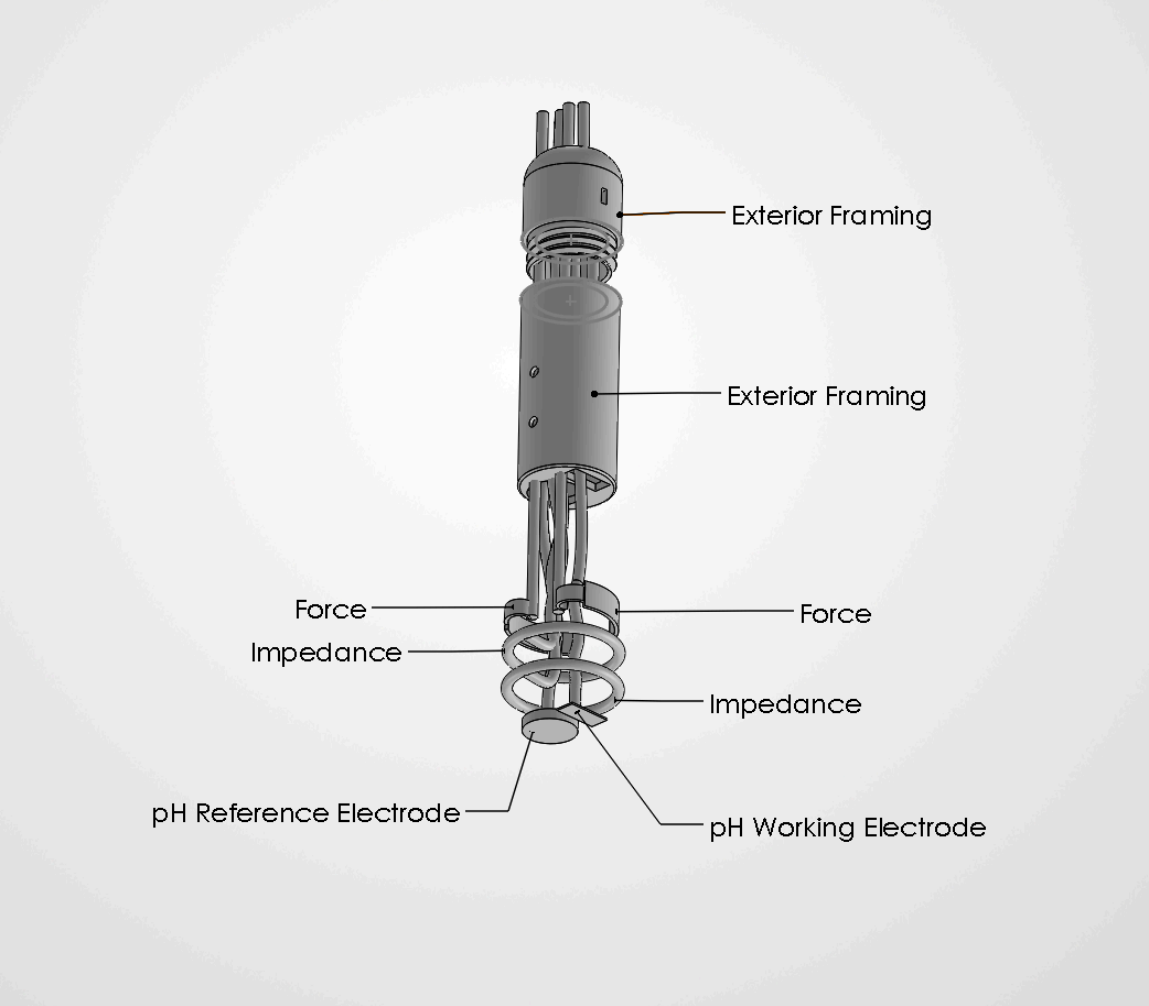

Figure 8: Initial capsule model , showcasing pH, impedance, and force sensors.

The device will be an ovoidal capsule 3D printed using PVDF filament, 13 mm in diameter, and 30 mm in length. It will incorporate the EGFET pH sensor, 2 circumferential stainless steel impedance electrode rings (2 mm) spaced 2 mm apart, an electrical supply for the impedance sensor with an excitation frequency of 2 kHz and a maximum AC current input of 10 uA. It will include a rubber exterior ring that is able to be compressed by the lower esophageal sphincter, with a small volume of incompressible fluid (oil) on the interior, and a piezoresistive pressure sensor. Three medical-grade copper micro-wires, one carrying

the signal from the pH sensor, one from the impedance sensor, and one from the pressure sensor, encapsulated by medical-grade FEP plastic will act as the tether. This tether will connect to an exterior monitor which will save and display the continuous pH, impedance, and force signals. For impedance, the wire will be connected from an impedance voltage transducer, through the capsule, and back out to a stationary impedance data acquisition system.

The device will be administered orally, with the patient swallowing the capsule while drinking fluid to ease the administration. The device will go down the esophagus, past the lower esophageal sphincter, and into the stomach. The administrator will then slowly pull out the device, past the lower esophageal sphincter, up the esophagus, and out the mouth. The device will have an external monitor that reads continuous pH, impedance, and force/pressure signals.

9. Design Objectives and Target Specifications

This section turns the requirements in Section 7 into targets we can test on the bench. It restates who the device is for and what it must do, and lists the decisions that narrow the design. It then gives each target specification, the basis for its value, and the test that will check it. It closes by measuring current practice against those targets.

9.1 Design Objectives

Our objective is to let a gastroenterologist measure acid exposure in the esophagus of a Barrett's patient during a routine clinic visit, in five minutes or less, without sedation or a nasal tube. The patient is awake and often has no symptoms, so the test must be comfortable enough that they agree to repeat it at later visits. A physician, helped by a nurse or technician, runs the test in an exam room and reads the result before the patient leaves.

Four needs decide whether the device works and whether it gets used. First, the patient must be able to swallow the capsule and have it pulled back out while awake. Second, the capsule must measure acid along the esophagus. Third, it must report where that acid sits relative to the lower esophageal sphincter (LES). This takes a pressure signal, because the pH step-up alone fell more than 3 cm from the upper border of the sphincter, as found by manometry, in 58% of patients.[45] Fourth, it must read the condition of the lining, since mucosal impedance taken at a single time point is lower where reflux has damaged the lining.[46]

[45] Mattox et al., “Gastroesophageal pH Step-up Inaccurately Locates Proximal Border of Lower Esophageal Sphincter.”
[46] Yuksel et al., “Use of Direct, Endoscopic-Guided Measurements of Mucosal Impedance in Diagnosis of Gastroesophageal Reflux Disease.”

Three decisions narrow the design. First, the capsule is placed and removed by a tether pull. The patient swallows it, and the physician pulls it back out through the mouth while it records. This rules out endoscopic placement, nasal catheters, and any device left in place for days. Second, the device uses no imaging. There is no camera in the capsule and no endoscopy or fluoroscopy to find it. Third, the capsule is no more than 5 mm wide. Requirement 1.4 allowed 13 mm, based on the 12 mm pressure capsules in Section 6.4. The new limit is narrower than the 6 mm by 5.5 mm cross section of the Bravo capsule[47] and close to the 4.2 mm width of a high-resolution manometry catheter.[48]

The targets also rest on one assumption about the test itself. We assume the pull is done after a meal with the patient lying down. In the Northwestern study, this is the condition in which the step-up most clearly separated GERD patients from controls, while fasting and upright it showed no difference between the groups.[49]

9.2 Target Specifications

Table 9.1 lists the target specifications. Each one is a metric with a limit that a bench test can pass or fail. We derived many of these values as working targets, and bench testing will confirm or adjust them.

[47] Lawenko and Lee, “Evaluation of Gastroesophageal Reflux Disease Using the Bravo Capsule pH System,” 2016.
[48] Marshall-Webb et al., “Mucosal Impedance as a Diagnostic Tool for Gastroesophageal Reflux Disease,” 2024.
[49] Pandolfino et al., “Acidity Surrounding the Squamocolumnar Junction in GERD Patients.”

Table 9.1. Target specifications for the pHIF Pill.

No.	Need	Metric	Target	Bench test
1	Awake placement	Sedation, and route in and out	No sedation, swallowed and pulled back out through the mouth by the tether	Review of the test procedure on the esophagus model
2	No imaging	Imaging needed to place the capsule or find the LES	None	LES found in the model from the pressure trace alone
3	Easy to swallow	Capsule width at its widest point, sensors included	≤ 5 mm	Calipers on the assembled capsule
4	Easy to swallow	Capsule length, end to end	≤ 30 mm	Calipers on the assembled capsule
5	Retrieved intact	Pull force the tether and its joint hold	≥ 5 times the peak pull force in the model	Force gauge pull on the tether joint
6	Fits a clinic visit	Time from swallow to removal	≤ 5 min	Timed run through the model
7	Result at the visit	Time from removal to result on screen	≤ 5 min	Timed run with the readout software
8	Affordable	Parts cost of one single-use capsule and tether	< $225	Bill of materials
9	Measures acid	pH range	1 to 8	Buffers across the range at 37 °C
10	Measures acid	pH accuracy	± 0.5 pH	Buffers checked against a calibrated lab pH meter
11	Measures acid while moving	pH response time, to 90% of a step	≤ 1 s	Sensor moved from an acidic buffer to a neutral one
12	Position vs the LES	Pressure range read without saturating	5† to 45 mmHg	Capsule held at depths of 6.8 to 61.2 cm in a water column
13	Position vs the LES	Error in the step-up's distance from the LES	± 0.5 cm	Pull through a tube with a narrowed section and an acid-soaked strip at known points
14	Position vs the LES	Change in pull speed within 5 cm of the LES	≤ 5%	Timed marks on the tether during a pull through the model
15	Readings along the pull	pH readings per second	≥ 10	Time stamps in the logged pH data during a model pull
16	Readings along the pull	Force (pressure) readings per second	≥ 10	Time stamps in the logged force data during a model pull
17	Readings along the pull	Impedance readings per second	≥ 10	Time stamps in the logged impedance data during a model pull
18	Traces line up	Time offset between the pH, force, and impedance channels	≤ 0.1 s	One trigger pulse logged on all three channels
19	Condition of the lining	Impedance range	0.4 to 10 kΩ	Precision resistors from 390 Ω to 10 kΩ
20	Condition of the lining	Impedance accuracy	± 10% of the reading	Resistors of 390 Ω, 1 kΩ, 3.3 kΩ, and 10 kΩ

No.	Need	Metric	Target	Bench test
21	Electrical safety	Excitation frequency and peak current	2 kHz, ≤ 10 µA	Oscilloscope across a sense resistor in series with a 1 kΩ load
22	Survives the stomach	Specifications 9 to 12 and 19 to 21 after 10 min at pH 1†	All still met	Soak, then repeat those tests

10. Sensor Technology and Alternatives

10.1 pH Sensor Approaches

Within electrochemical pH sensors, there are many different categories of sensing technologies that may be considered. This section of the report aims to give an overview of the gold standards used in the field, limitations of each approach, and the decision matrix for our final pH sensing decision.

10.1.1 Glass Electrodes

Glass electrodes are the current gold standard for laboratory pH measurement[50]. They function using a pH sensitive glass membrane along with a reference electrode, usually made of Ag/AgCl, and feature a pH sensitivity of 59 mV/pH[51]. Glass electrodes are widely used and considered to be the most sensitive and stable electrode[52]. However, they falter when it comes to their ability to be miniaturized, and no electrodes exist today that combine pH sensing with impedance electrodes[53]. On this basis alone, our team decided to not move further with glass electrodes.

10.1.2 Transistor-Based Electrodes

Transistor based electrodes, such as ISFET and EGFET technologies, function as described in section 6.2. The two types of transistor technologies, ISFET and EGFET differ in their method of integration into the pH sensing system. Whereas ISFET based sensors do

[50] Hemmink et al., “Ambulatory Oesophageal pH Monitoring.”
[51] Graham et al., “Development of the Glass Electrode and the pH Response.”
[52] Hemmink et al., “Ambulatory Oesophageal pH Monitoring.”
[53] Hemmink et al., “Ambulatory Oesophageal pH Monitoring.”

not separate the ion-sensitive gate with the rest of the transistor, EGFETs are able to separate the two components, which allow for new sensing pads to be tested and allow a greater modularity and flexibility when it comes to designing the sensing capsule. Also, EGFETs are easily prototyped at low cost, only requiring a breadboard, reference electrode, and sensing pad all connected to a microcontroller, such as the Raspberry Pi Pico.

10.1.3 Metal Oxide Electrodes

Metal oxide electrodes are currently used in the Medtronic Bravo (antimony-oxide based) and like other pH electrodes, probe pH through potential changes between the metal oxide and hydrogen ions. These electrodes are able to be miniaturized small enough to be combined with impedance monitoring. However, these electrodes have been shown to be less accurate compared to glass electrodes in laboratory settings[54].

10.2 Impedance Circuit Design

As explained in the initial report, mucosal impedance was chosen as the method for measuring esophageal impedance.[55] Thus, this section will detail the design of the circuit and components necessary for measurement in the pHIF pill.

In principle, the circuit needs to produce a current that is transferred to mucosal tissue and read the returning current in order to measure impedance. The current must be alternating current (AC) instead of direct current (DC), as DC current will cause positive and negative ions in cells to migrate in opposite directions leading to electrolysis,[56] create electrode polarization, and be blocked by lipid bilayers, all of which can lead to cell death and patient

[54] Hemmink et al., “Ambulatory Oesophageal pH Monitoring.”
[55] Marshall-Webb et al., “Mucosal Impedance as a Diagnostic Tool for Gastroesophageal Reflux Disease,” 2024.
[56] Calzado et al., “Optimizing Electrolytic Ablation Therapy.”

discomfort.[57] An AC current of 2 kHz is most useful because it is high enough to pass through tissue and intercellular spaces (where Barrett's-induced fluid buildup is common), but low enough to avoid triggering action potentials and penetrating cell membranes (which would measure intracellular volume more than mucosal integrity).[58] A current of 10 uA is ideal for the transmission of the signal through the tether due to its strength to generate a measurable voltage drop, but also its weakness which prevents electrochemical burns, accidental arrhythmia triggers, and neuromuscular stimulation as mentioned above.[59]

In order to achieve this precise signaling, a microcontroller is first needed to set the frequency and initiate the measurement protocol. The user must set up the microcontroller to program the excitation frequency of the next component, an impedance converter. The impedance converter then generates a sinusoidal AC excitation voltage, governed by the equation $V(t) = V_0 sin(2\pi ft)$. However, the output also will contain DC bias, necessitating the need for analog signal conditioning. This step will remove the DC bias, with a cutoff frequency $f_c = \frac{1}{2\pi RC}$ below 2 kHz.[60] Analog signal conditioning also will contain a unity gain op amp for buffering and a current limiting component governed by the equation $I_{peak} = \frac{V_{peak}}{R_{series}+R_{load}}$. Next, a resistor must be placed in series to limit the current delivering along the tether and to the mucosa. The signal will then arrive at the first electrode, which will be a ring in order to maximize exposure to the mucosa and made out of stainless steel because it is strong, conductive, and biocompatible. After traveling through the mucosa, a second identical stainless steel ring will receive the signal from the tissue, with the complex

[57] Ciria et al., "Antitumor Effects of Electrochemical Treatment."
[58] Yuksel et al., "Use of Direct, Endoscopic-Guided Measurements of Mucosal Impedance in Diagnosis of Gastroesophageal Reflux Disease."
[59] Cogan et al., "Tissue Damage Thresholds during Therapeutic Electrical Stimulation."
[60] Zhivkov et al., "Computer Controlled System for Impedance Measurements."

impedance taking the form of $Z = R + jX$ where j represents the imaginary component. An analog receive circuit the converts the current to voltage using the equation $V_{out} = -I_{in}R_f$ and adjusts the gain to boost the signal. The signal then returns back to the impedance converter, which converts the signal to digital form and parses its amplitude and phase at the 2 kHz frequency. It will then perform discrete Fourier transform (DFT) and output a real and imaginary component with a magnitude $M = \sqrt{D_{real}^2 + D_{imaginary}^2}$. Finally, the microcontroller will receive these values and convert it to an impedance measurement, where Matlab can then be used to visualize and graph the values.[61]

The selection rationale section will go more in depth into the specific components, equations, and measurements governing the design.

10.3 Force Sensor Approaches

The force sensor locates the capsule by detecting the squeeze of the LES as the capsule is pulled through it. The squeeze is weak, and a normal LES rests at 10 to 45 mmHg (Spechler and Castell). In one study, the median resting pressure in GERD patients was only 1.0 to 12.0 mmHg, depending on posture and meals.[62] This section compares three ways to sense it.

10.3.1 High-Resolution Manometry

High-resolution manometry (HRM) uses a catheter 4.2 mm wide with 36 pressure sensors spaced 1 cm apart (Figure 4A), so the LES shows up as a band of high pressure.[63]

[61] Jadhao, *Embedded System for Impedance Measurement*.
[62] Pandolfino et al., "Acidity Surrounding the Squamocolumnar Junction in GERD Patients."
[63] Pandolfino et al., "Acidity Surrounding the Squamocolumnar Junction in GERD Patients."

It locates the sphincter directly, but the catheter passes through the nose, and in one study 8 of 20 subjects refused or could not tolerate it alongside a pH catheter.[64]

10.3.2 Fluid-Coupled Pressure Sensors

A capsule can also sense a squeeze through fluid. Li et al. sealed pressure sensors under a rubber membrane filled with silicone oil (Section 6.4). After calibrating the capsule in water at body temperature, they recorded a pig's intestinal contractions with a peak of 0.24 kPa, about 1.8 mmHg.[65] That sensitivity is well below normal LES pressures. The cost is complexity, since a second sensor was needed to subtract the surrounding pressure. Our rubber ring and oil borrow this design.

10.3.3 Force Sensitive Resistors

Force sensitive resistors (FSRs), like the FlexiForce A101 in Section 6.4, are thin films whose resistance drops under force. They are cheap and thin, but they drift, show hysteresis, and must be calibrated in a setup that matches their use.[66] One thin-film sensor also shifted its zero reading and lost sensitivity when bent around a radius under 32 mm.[67] A film wrapped around our 13 mm capsule would bend around a 6.5 mm radius. We ordered two SparkFun small FSRs, each with a 4 mm active area rated from 0.1 to 10 N. We also ordered two ABRA RP-W2.5-L15.5 strips, each 2.5 by 15.5 mm with a 5 g trigger force. Sensitivity is the main risk. If the oil presses evenly on each active area, the

[64] Pandolfino et al., “Acidity Surrounding the Squamocolumnar Junction in GERD Patients.”
[65] Li et al., “Design and Preliminary Experimental Investigation of a Capsule for Measuring the Small Intestine Contraction Pressure.”
[66] Swanson et al., “Evaluation of Force Sensing Resistors for the Measurement of Interface Pressures in Lower Limb Prosthetics”; Ferguson-Pell et al., “Evaluation of a Sensor for Low Interface Pressure Applications.”
[67] Ferguson-Pell et al., “Evaluation of a Sensor for Low Interface Pressure Applications.”

SparkFun sensor would need about 60 mmHg to reach 0.1 N, above the top of the normal range. The ABRA strip would reach its trigger at about 9.5 mmHg, so it could still miss the weakest sphincters. Bench tests under known water columns will show which sensor and mounting can detect the sphincter.

11. Selection Rationale

11.1 pH Sensor

Several criteria were used to determine the pH sensor technology that we will move forward with for our prototype. These included size, price, pH range, pH sensitivity and response time.

The Medtronic Bravo, the standard in clinic, features an antimony sensor and a reference electrode. The size of the capsule is 25 mm × 6 mm × 5.5 mm, and costs $225 per single-use capsule[68]. The sampling rate of the Bravo is 0.16 Hz, or sampling every six seconds[69]. The Bravo is able to measure throughout the acidic pH range, being tested from pH 1-8, which is adequate for measuring acid reflux, where only acidic pH values are relevant[70].

The ISFET pH sensor is also small, with examples from Millar reaching a size of 46 mm in length and 3 mm in diameter, which can get even smaller (e.g. 50nm x 10um x

[68] Lawenko and Lee, "Evaluation of Gastroesophageal Reflux Disease Using the Bravo Capsule pH System," 2016.
[69] des Varannes et al., "Simultaneous Recordings of Oesophageal Acid Exposure with Conventional pH Monitoring and a Wireless System (Bravo)."
[70] Hemmink et al., "Ambulatory Oesophageal pH Monitoring."

40nm, seen in a silicon nanowire ISFET system)[71]. It has a range of 0-14 pH, which is more than adequate for acidic pH sensing. It has a pH sensitivity of 52 mV/pH, and its accuracy is ± 0.01 pH according to official Millar datasheets.

The EGFET sensor size can be variable, according to a desired size of the sensing pad. Since the transistor stays outside of the capsule, the sensing pad size is all that we would have to worry about, and one can easily detach the pad from the rest of the circuitry, allowing for easy replacements. The EGFET has a sensitivity around 52 mV/pH, which is similar to the Medtronic Bravo[72]. It operates at a range of pH 2-9 however, which may cause issues if pH drops below 2. The response time of the pH sensor is around one second.[73] The price is the most attractive feature of the EGFET sensor, with total parts totaling ~$30 USD.

Decision Matrix (Ranking)

Criteria	DIY EGFET Sensor	MIllar pH Sensor	Standard in Clinic- Antimony pH sensor (Medtronic Bravo)
Sensor type	EGFET	ISFET	Antimony
Size	Variable, depends on ITO cutout	46 × 15 × 3 mm	25 mm × 6 mm × 5.5 mm
Price (USD)	1	3	2
pH Range	3	1.5	1.5
Sensitivity	1.3	1.3	1.3
Response Time	2.5	1	2.5
Flexible / conformable	1.5	1.5	3

[71] Kim et al., "Silicon Nanowire Ion Sensitive Field Effect Transistor with Integrated Ag/AgCl Electrode," 2011.
[72] Alvarez-Serna and Ramírez-Chavarría, "EGFET-Based pH Sensor Coupled with Low-Cost Electrochemical Screen-Printed Electrodes."
[73] Wu et al., "High Performance EGFET-Based pH Sensor Utilizing Low-Cost Industrial-Grade Touch Panel Film as the Gate Structure."

Although all three sensors perform well for our pH sensing purposes, the EGFET sensor stands out as the top option of the three, due to its low cost while providing similar sensing capabilities to detect acid reflux. Price is heavily weighted in our choice, since our sensor should not exceed the price of the Medtronic Bravo ($225). Additionally, we are only looking for the drop in pH below 4, so the EGFET sensing capabilities are adequate for our purposes. The parts that we have selected for this sensor include a Texas Instruments CD4007UBE (the MOSFET transistor), indium tin oxide (ITO) coated polyethylene terephthalate (PET) touch film (pH sensing pad), along with operational amplifiers and resistors of varying resistance. A Raspberry Pi Pico will also be used to analyze the signals coming from the transistor and give the final pH reading. The only parts that have to be inserted into the capsule would be the Ag/Cl reference electrode, ITO film, and wires to transmit the electrical potential to the transistor. These parts have been modeled in LT spice to ensure linearity over expected voltage values, and initial circuit diagrams were made (See Figures 9-11).

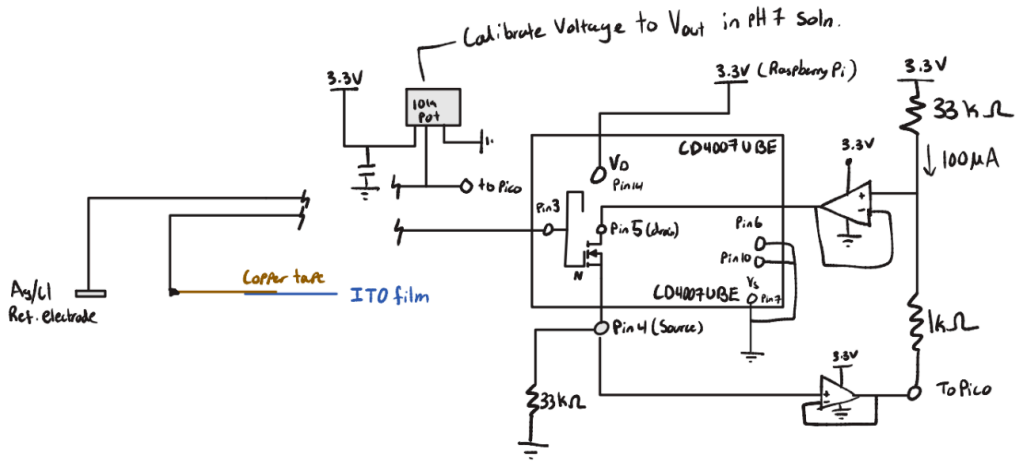

Figure 9: Circuit diagram of EGFET pH sensor.

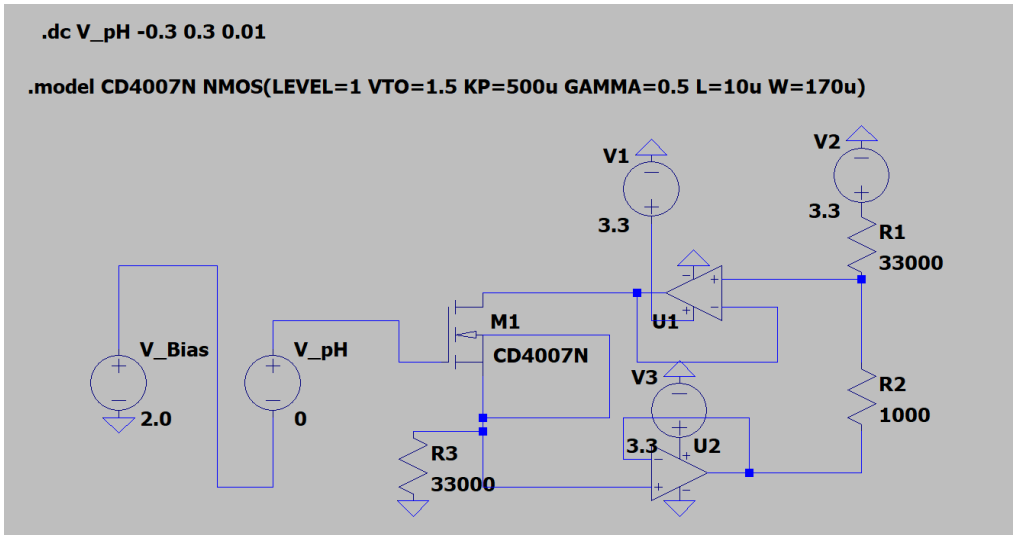

Figure 10: LT Spice circuit diagram of EGFET pH sensor.

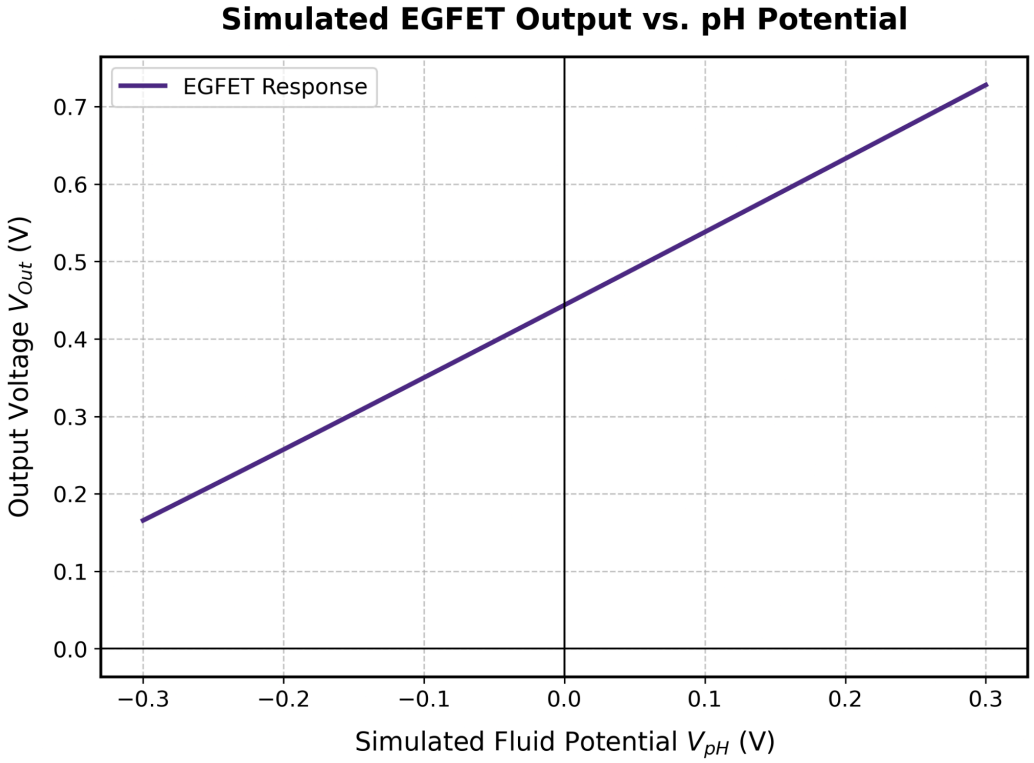

Figure 11: LT Spice generated DC sweep of V_{pH} from -0.3 to 0.3 V, plotted simulated EGFET response (V_{out}) in Python.

To evaluate the pH sensor in vitro, pH buffers (pH 4, 7, and 10) will be used to evaluate the pH response of the sensor and its response time by taking the sensor from one buffer to another. The sensor also will be evaluated for pH reading drift over 10 minutes. Together, these two readings will be able to characterize the behavior of the sensor.

11.2 Impedance Circuit Components

Within the circuit, the microcontroller, impedance converter, and electrode had to be carefully chosen in order to effectively transmit the electrical signal and process accurate impedance data.

The microcontroller needed to be compact, powerful, and have a strong enough voltage to generate the 2 kHz frequency wave. The ESP32-WROOM-32 was ultimately chosen as the microcontroller due to its stronger processing power, portable functionality (especially since it can be wireless), and ability to perform DFT calculations and transmit those to the computer. It will program the impedance converter using the equation $F_{reg} = \frac{f_{out} 2^{27}}{f_{MCLK}/4}$, where f_{out} is the desired excitation frequency (2 kHz) and f_{MCLK} is the master clock frequency for the impedance converter (16.776 MHz), meaning that $F_{reg} \approx 64016$. When the signal comes back in both real and imaginary components from the converter, the ESP32 will convert the values to an impedance measurement using the equation $GF = \frac{1}{|Z_{cal}|M_{cal}}$, where the gain factor is calculated by using the DFT

magnitude when tested on a substance of known impedance Z_{cal}. This will then be reformed in the equation $|Z| = \frac{1}{GF \cdot M}$ to calculate the unknown mucosal impedance.

Microcontroller Decision Matrix

Options	1	2
Type	ESP32-WROOM-32	Raspberry Pi Pico
Dimensions	18 x 25.5 x 3.1 mm	21 x 51 x 3.9 mm
Price (USD)	8	4
Voltage	3.3V	3.3V
CPU Clock	240 MHz	133 MHz
Supports I^2C	Yes	Yes
Wireless	Yes	No

Next, the impedance converter must be able to communicate with the ESP32 to set the output current and frequency, and perform DFT when the signal is returned. It again needs to be compact and inexpensive, and hence Analog Device's AD5933 impedance converter was chosen. It has the required voltage and impedance range, and has high resolution and low sensitivity for a low cost. It will take in the voltage, convert it to digital, and then perform DFT to output the real and imaginary signal components. The AD5933 has a 0.2V peak to peak excitation setting at a voltage of 3.3 V indicating that the peak excitation is 0.1 V. Therefore, the resistor in series will be 22 kOhms so that the current peak $I = \frac{V}{R} = \frac{0.1}{22000} = 4.6\ \mu A$, which is under the 10 uA limit.

Impedance Converter Decision Matrix

Options	1	2
Type	AD5933	TI AFE4300

Dimensions	6.2 x 7.8 mm	9 x 9 mm
Price (USD)	12.60	12
Voltage Range	2.7-5.5V	2.0-3.6V
Impedance Range	1 kOhm - 10 MilliOhm	n/a
Sampling Rate	1 MSPS	860 SPS (no continuous excitation frequencies)
Accuracy	0.5%	Not universal

Finally, the electrodes must properly contact the esophageal mucosa and relay the signal back towards the converter and microcontroller. 316L stainless steel was chosen because of its biocompatibility, strength, ease of manufacturing, and cost. Rings pair well with the cylindrical capsule design and maximize contact with the mucosal wall. Because they are circumferential, the equation $R = \frac{L}{\sigma A}$ will be used where sigma is conductivity, L is the current path length, and A is the cross section area of the ring. This is necessary to take into account the final shape and geometries when analyzing the signal.

Electrode Decision Matrix

Options	**1**	**2**
Type	316L Stainless Steel Ring	Platinum
Dimensions	10 mm outer diameter, 9 mm inner diameter	10 mm outer diameter, 9 mm inner diameter
Price (USD)	17	50-100
Biocompatibility	High	Very high
Durability	High	Moderate
Resistivity	0.74 uOhm*m	0.11 uOhm*m
Conductivity	$1.35*10^6$ S/m	$9.4*10^6$ S/m
Machinibility	High	Low

The two stainless steel electrode rings will be placed 2mm apart. The impedance circuit will have a maximum sampling rate of 0.001 ms, but will be set to 50s, and a resolution of 10 Ohms which correlates to a sensitivity of ~1%. This device will be first calibrated by connecting resistors of 1, 3.3, and 10 kOhms, followed by in vitro testing using the same pH buffers as the pH sensor (which have known conductivities) to test the device in fluid. The test will last 10 minutes.

11.3 Force Sensor Selection Rationale

The most important factors considered when selecting the force sensor in this design were overall size, sensing area size, and minimum detectable force. The lower esophageal sphincter has a resting pressure of ~10-30 mmHg, and the lower end of this range will be used to determine if the minimum detectable force for a given force sensor would adequately sense the capsule passing through the lower esophageal sphincter upon removal. We planned to order the RP-W2.5-L15.5 sensor, which is included in the current 3D model, but it is currently unavailable. Therefore, the design will be reverted to our original rubber-ring and oil-filled chamber design, with further design modifications to be made in order to focus LES pressure onto the small sensing area. The force sensor decision matrix is outlined below. It is shown that the SparkFun has the best combination of a small sensing area diameter and low minimum detectable force, and its effective space requirements are considerably smaller than its overall dimensions suggest, as most of its length consists of a flexible tail that can be coiled within the capsule.

Force Sensor Decision Matrix

Criteria	SparkFun SEN-09673	RP-W2.5-L15.5	Tekscan A101	Interlink FSR 400 Short
Sensor type	Resistive FSR	Resistive FSR	Resistive FSR	Resistive FSR
Size	44.5 × 7.1 mm overall	15.5 × 2.5 × 0.3 mm	15.6 × 7.6 × 0.203 mm excluding pins	20 mm long; 7.2 mm head diameter
Price (USD)	$10.95	$4.95	$11.42	$2.99
Wired tether compatibility	Yes - 2 wires	Yes - 2 wires	Yes - 2 wires	Yes - 2 wires
Minimum detectable force	~0.1 N operating range	~0.049 N (5 g)	Not specified as a minimum	~0.3 N
Maximum rated force	~10 N	~9.81 N (1 kg)	18 N or 44 N versions	20 N
Flexible / conformable	Yes - bend limitations	Yes	Yes - bend limitations	Yes - bend limitations
Ease of integration	Moderate - long tail	High - narrow film	High - compact head	Moderate - circular head
Signal conditioning	Voltage divider	Voltage divider	Voltage divider or op-amp	Voltage divider
Sensing area dimensions	⌀ 4mm	2.5 x 15.5 mm	⌀ 3.8 mm	⌀ 5.1 mm

12. Appendix

12.1 Optical Sensing Devices

Optical sensing devices, which tend to be incorporated into a capsule or tether, can be used to obtain visual information on esophageal tissue. This section will focus on two devices, the Medtronic Pillcam ESO, the Mirocam Navi, and the AnX Robotics NaviCam XST.

The Medtronic Pillcam ESO has two cameras at both ends and captures images of the esophagus at 35 frames per second[74]. The movement of the capsule depends on esophageal peristalsis, which makes predicting transit time difficult. The main limitations of optical and camera based devices are that small lesions can be missed due to a lack of air sulfation. When tested for diagnostic accuracy of BE, the Pillcam had a sensitivity of 77% and a specificity of 86%[75].

The Mirocam Navi is a magnetically controlled capsule that functions similarly to the Medtronic ESO, but its ability to be steered using an external hand-held magnet allows the physician to control esophageal positioning[76]. This extra level of control allows passage time in the esophagus reaching a mean of 190 seconds according to a study by Beg et. al, 2020[77]. The study also concluded that the Mirocam Navi had a sensitivity of 93.8% and a specificity of 100% for detecting BE.

---

[74] Vantanasiri et al., "Advances in Screening for Barrett Esophagus and Esophageal Adenocarcinoma."
[75] Vantanasiri et al., "Advances in Screening for Barrett Esophagus and Esophageal Adenocarcinoma."
[76] Beg et al., "Diagnosis of Barrett's Esophagus and Esophageal Varices Using a Magnetically Assisted Capsule Endoscopy System."
[77] Beg et al., "Diagnosis of Barrett's Esophagus and Esophageal Varices Using a Magnetically Assisted Capsule Endoscopy System."

The Navicam XST differs from the Mirocam and the Medtronic Pillcam ESO in that the Navicam features a tether attached to the camera capsule which the physician can maneuver around the esophagus[78]. Having the tether offers finer control, similar to the use of a magnet in the Mirocam Navi.

[78] "NaviCam XST."